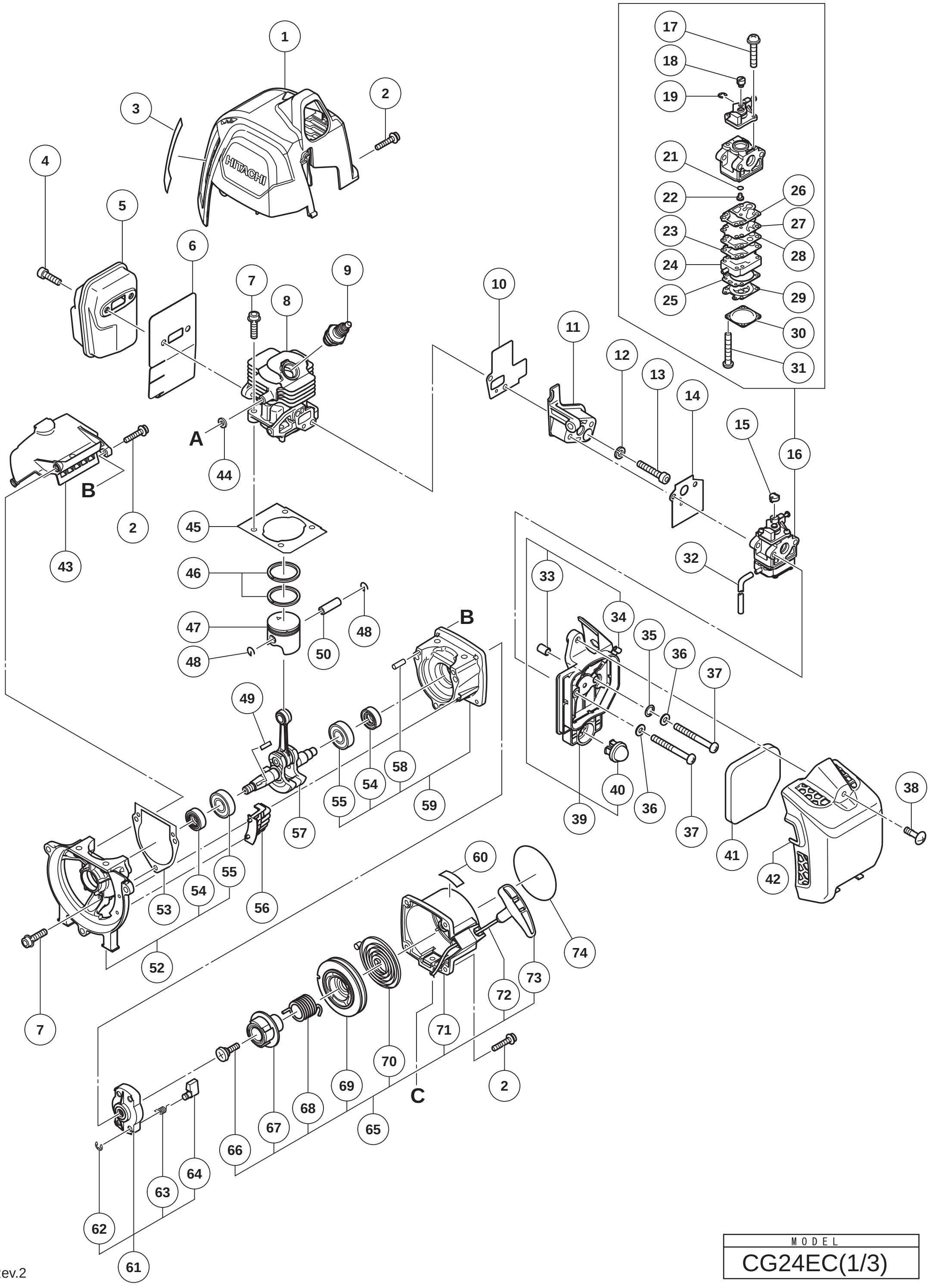

MODEL
CG24EC(1/3)

Rev.2

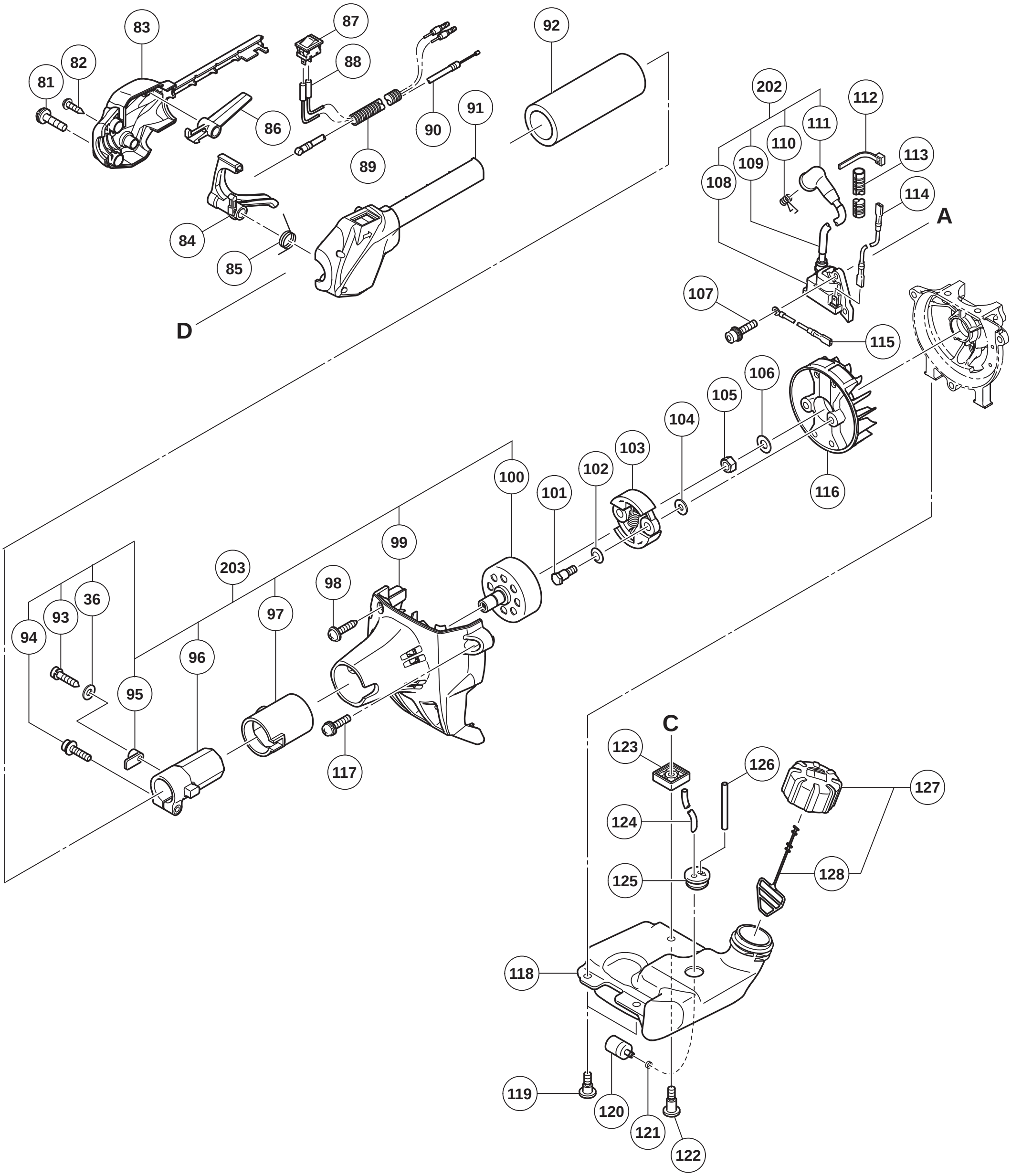

MODEL

CG24EC(2/3)

Rev.3

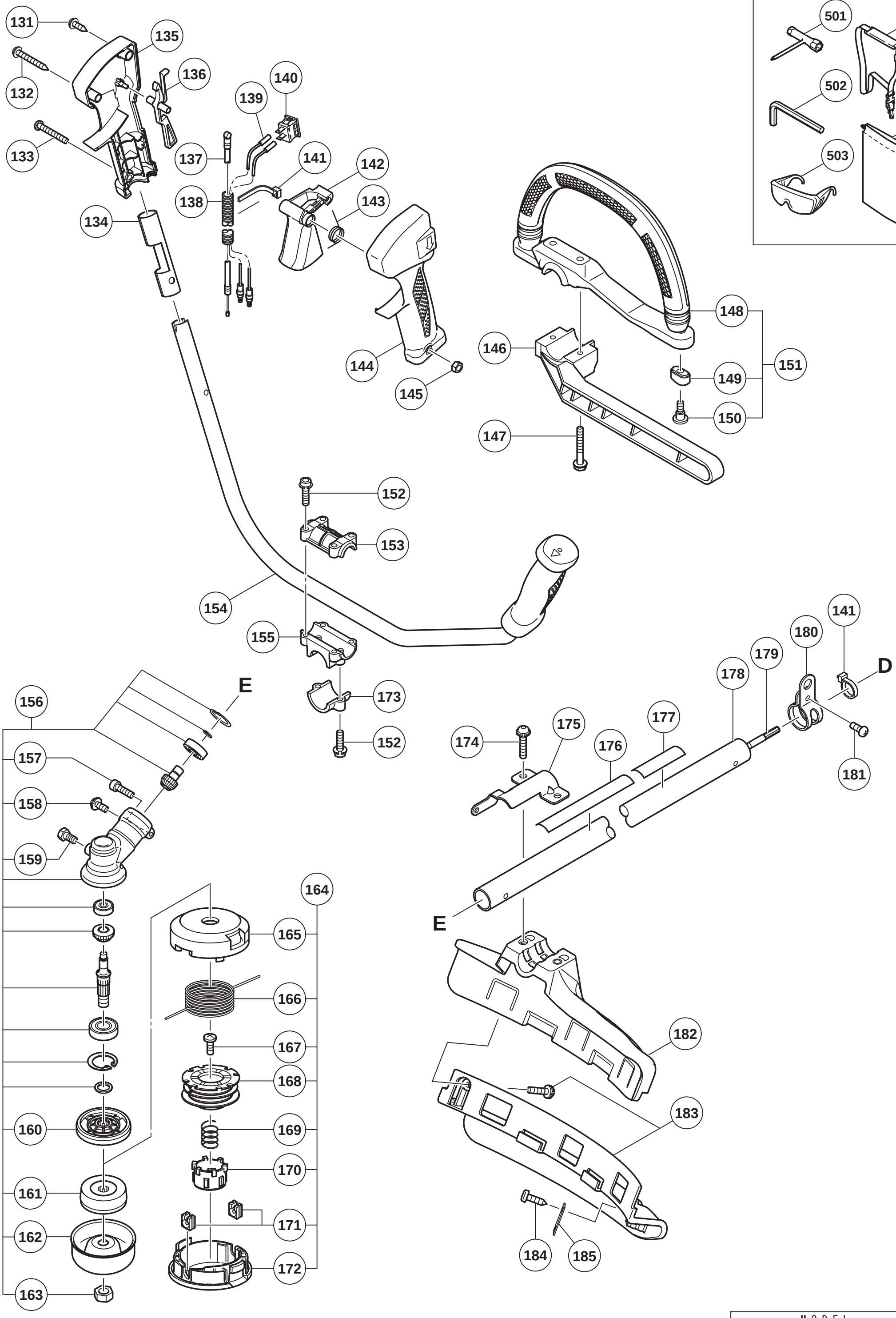

Rev.1

MODEL
CG24EC(3/3)