Robbantott ábra / Alkatrészlista

DHP487

Akkumulátoros ütvefúró-csavarbehajtó

2021/05

DHP487 / Akkumulátoros ütvefúró-csavarbehajtó

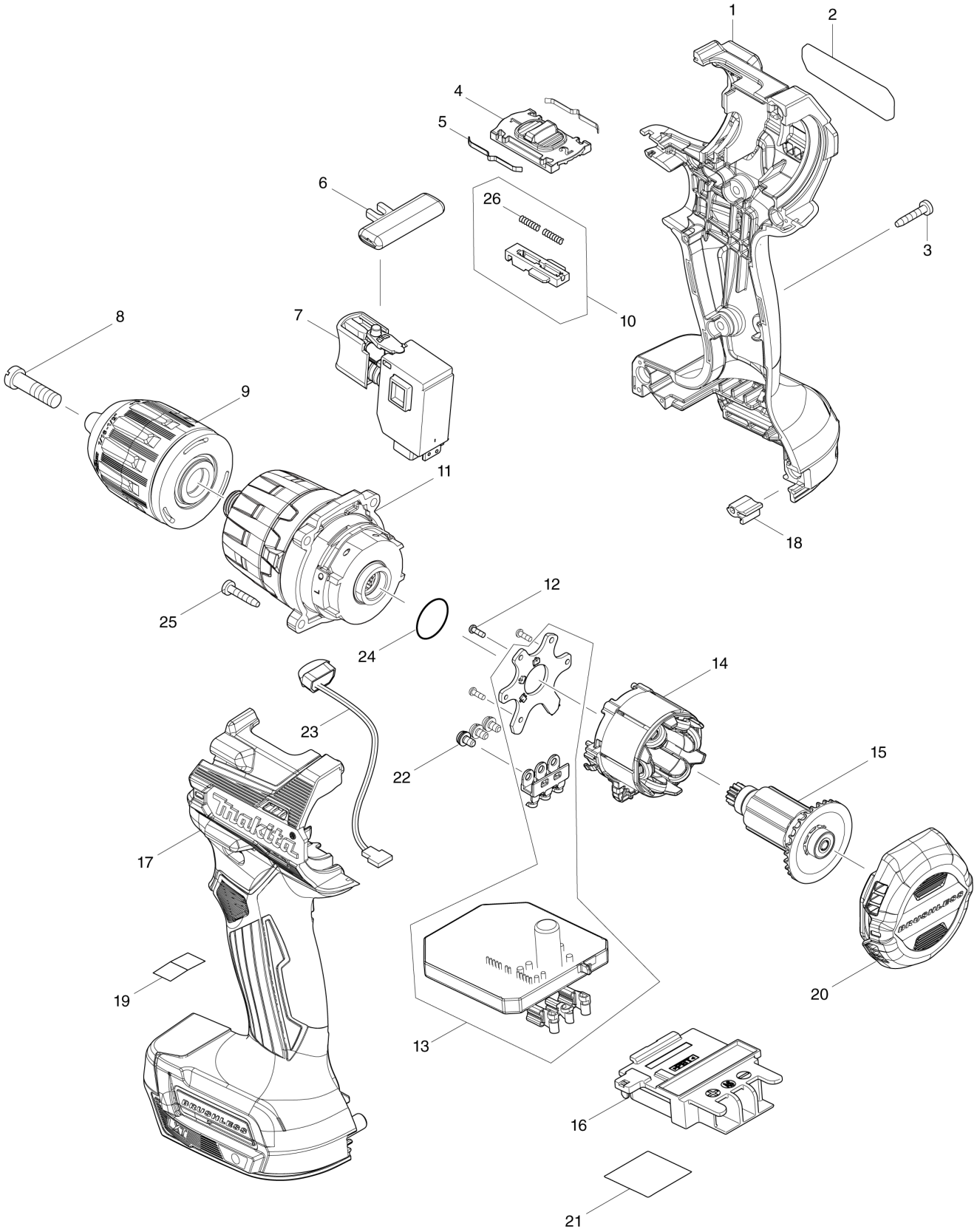

DHP487 / Akkumulátoros ütvefúró-csavarbehajtó

Item	Sub	Parts No.	Parts Description	Qty	I/C	E/C No.	Close No.	Remark
001		183S07-6	HOUSING SET	1				
	C10	263005-3	RUBBER PIN 6	2				
	C20	252126-6	HEX. LOCK NUT M4-7	2				
	D10		INC. 17					
002		811B94-0	DHP487 NAME PLATE	1				
003		266429-2	TAPPING SCREW 3X16	7				
004		413310-0	SPEED CHANGE LEVER	1				
005		232493-5	LEAF SPRING	2				
006		419041-9	F/R CHANGE LEVER	1				
007		650689-0	SWITCH C3JW-2B	1				
008		251468-5	- FLAT HEAD SCREW M6X22	1				
009		763256-3	KEYLESS DRILL CHUCK 13	1				
010		127758-7	CHANGE LEVER ASSEMBLY	1				
	D10		INC. 26					
011		127824-0	GEAR ASSEMBLY	1			D9363	
011-1		122B23-1	GEAR ASSEMBLY	1	O	D9363		
012		266490-9	TAPPING SCREW PT 2X6	3				
013		620E45-8	CONTROLLER	1				
014		629A41-9	STATOR	1				
015		619671-8	ROTOR	1				
016		643874-2	TERMINAL	1				
017		183S07-6	HOUSING SET	1				
	C10	263005-3	RUBBER PIN 6	2				
	C20	252126-6	HEX. LOCK NUT M4-7	2				
	D10		INC. 1					
018		424517-3	CUSHION	1				
020		413309-5	REAR COVER	1				
021		811C02-7	DHP487 SERIAL NO. LABEL	1				
022		652069-6	FLAT HEAD SCREW M3X6	3				
023		620549-0	LED CIRCUIT	1				
024		213087-5	O-RING 16.5	1				
025		266429-2	TAPPING SCREW 3X16	4				
026		233025-1	COMPRESSION SPRING 2	2				
A01		251314-2	+ SCREW M4X12	1				
A02A		346317-0	HOOK	1				
A02B		346449-3	HOOK	1				
A02C		346317-0	HOOK	1				
A03		784637-8	+- BIT 2-45	1				
A04B		821550-0	CONNECTOR PLASTIC CASE (TYPE2)	1				
	C10	453974-8	LATCH	4				
A04C		821550-0	CONNECTOR PLASTIC CASE (TYPE2)	1				
	C10	453974-8	LATCH	4				
A05B		450128-8	BATTERY COVER	1				
A05C		450128-8	BATTERY COVER	1				
A06B		***DC18RC	DC18RC FAST CHARGER	1				
	D10		COMPO-PARTS					
A06C		***DC18RC	DC18RC FAST CHARGER	1				
	D10		COMPO-PARTS					
A07B		197254-9	BATTERY BL1820B SET	2				
A07C		197280-8	BATTERY BL1850B SET	2				
A08B		837670-0	INNER TRAY	1				
A08C		837670-0	INNER TRAY	1				
A09B		8031N9-3	DHP487RAJ INDICATION LABEL	1				
A09C		8031P5-5	DHP487RTJ INDICATION LABEL	1				
A10B		8031P0-5	DHP487RAJ PLASTIC CASE LABEL	2				
A10C		8031P6-3	DHP487RTJ PLASTIC CASE LABEL	2				

A:DHP487Z(N)
B:DHP487RAJ(H)
C:DHP487RTJ(H)

Interchange
O : Yes
X : No
< : the new part can be substituted for the current.
> : the current part can be substituted for the new.
S : Interchangeable as a set.