Diagram / Parts List

DTD157

CORDLESS IMPACT DRIVER

2021/02

(AT) DTD157 / CORDLESS IMPACT DRIVER

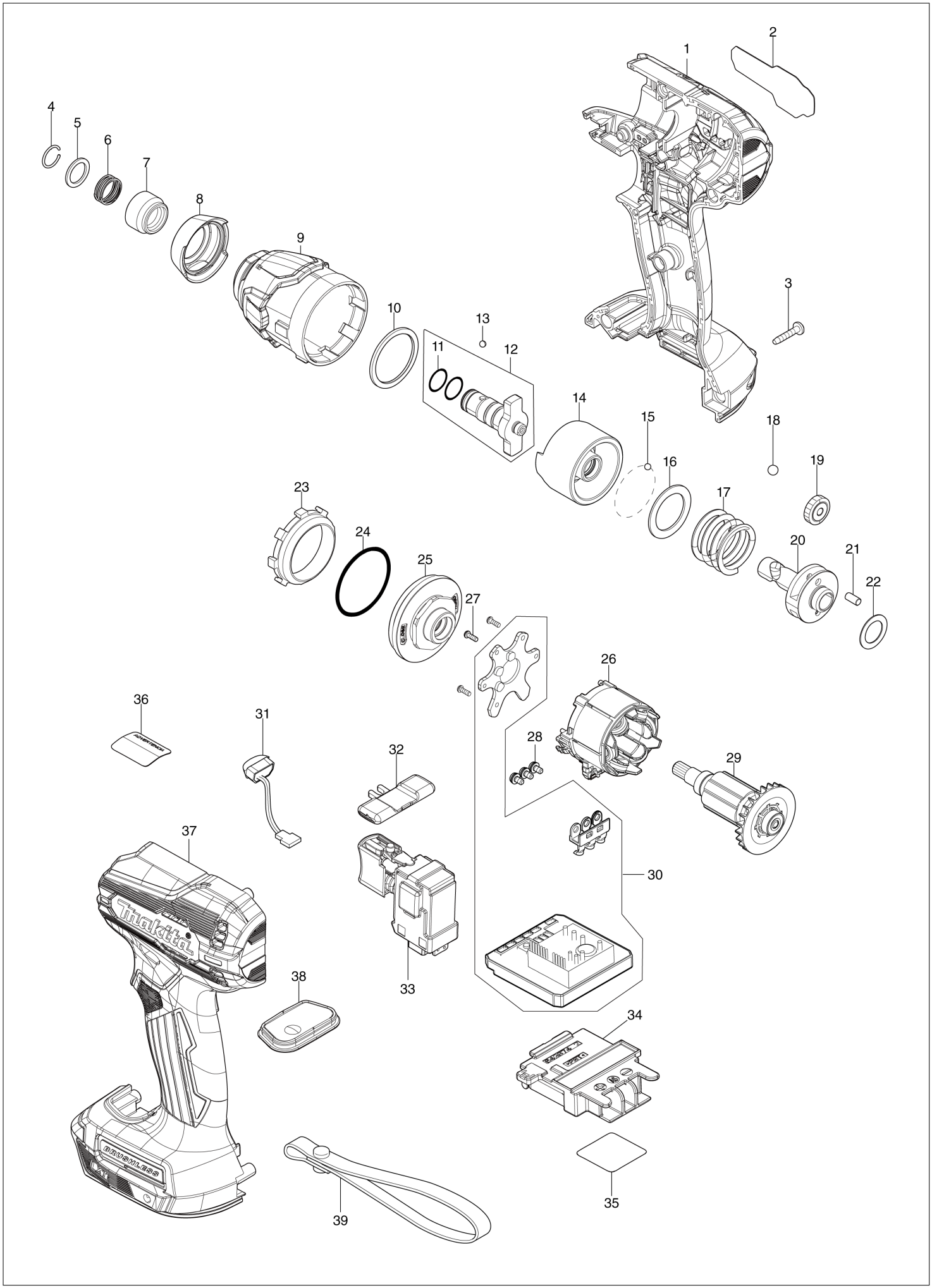

DTD157 / CORDLESS IMPACT DRIVER

Item	Sub	Parts No.	Parts Description	Qty	I/C	E/C No.	Close No.	Remark
001		183S27-0	HOUSING SET	1				
	C10	263005-3	RUBBER PIN 6	2				
	C20	252126-6	HEX. LOCK NUT M4-7	2				
	D10		INC. 37					
002		811B03-9	DTD157 NAME PLATE	1				
003		266429-2	TAPPING SCREW 3X16	9				
004		231965-7	RING SPRING 10	1				
005		267143-3	FLAT WASHER 11	1				
006		233005-7	COMPRESSION SPRING 13	1				
007		326803-7	BIT SLEEVE	1				
008		422661-0	BUMPER	1				
009		140Y09-1	HAMMER CASE COMPLETE	1				
010		261165-5	NYLON WASHER 26	1				
011		213920-1	O-RING 10.5	2				
012		136381-7	ANVIL M ASS'Y	1				
	D10		INC. 11					
013		216019-1	STEEL BALL 3	2				
014		327824-2	HAMMER	1				
015		216019-1	STEEL BALL 3	24				
016		267380-9	FLAT WASHER 20	1				
017		232326-4	COMPRESSION SPRING 21	1				
018		216002-8	STEEL BALL 4.8	2				
019		227213-0	SPUR GEAR 17	2				
020		327743-2	SPINDLE	1				
021		268217-3	PIN 3.5	2				
022		253052-2	FLAT WASHER 12	1				
023		227316-0	INTERNAL GEAR 43	1				
024		213479-8	O RING 33	1				
025		140Y11-4	BEARING BOX COMPLETE	1				
026		629A44-3	STATOR	1				
027		266490-9	TAPPING SCREW PT 2X6	3				
028		652069-6	FLAT HEAD SCREW M3X6	3				
029		619672-6	ROTOR	1				
030		620E43-2	CONTROLLER	1				
031		620521-2	LED CIRCUIT	1				
032		455053-8	F/R CHANGE LEVER	1				
033		143975-1	SWITCH COMPLETE	1				
034		643874-2	TERMINAL	1				
035		811B11-0	DTD157 SERIAL NO. LABEL	1				
037		183S27-0	HOUSING SET	1				
	C10	263005-3	RUBBER PIN 6	2				
	C20	252126-6	HEX. LOCK NUT M4-7	2				
	D10		INC. 1					
038		144137-4	SWITCH PLATE COMPLETE	1				
A01		346317-0	HOOK	1				
A02		266622-8	+ TRUSS HEAD SCREW M4X12	1				
A03B		821550-0	CONNECTOR PLASTIC CASE (TYPE2)	1				
	C10	453974-8	LATCH	4				
A04B		8030E6-0	DTD157RTJ PLASTIC CASE LABEL	2				
A05B		8030E5-2	DTD157RTJ INDICATION LABEL	1				
A06B		837670-0	INNER TRAY	1				
A07B		***DC18RC	DC18RC FAST CHARGER	1				
	D10		COMPO-PARTS					
A08B		197280-8	BATTERY BL1850B SET	2				
A09B		450128-8	BATTERY COVER	1				

B:DTD157RTJ(H)

Interchange
O : Yes
X : No
< : the new part can be substituted for the current.
> : the current part can be substituted for the new.
S : Interchangeable as a set.