Diagram / Parts List

PV301D

75MM CORDLESS SANDER POLISHER

2021/01

PV301D / 75MM CORDLESS SANDER POLISHER

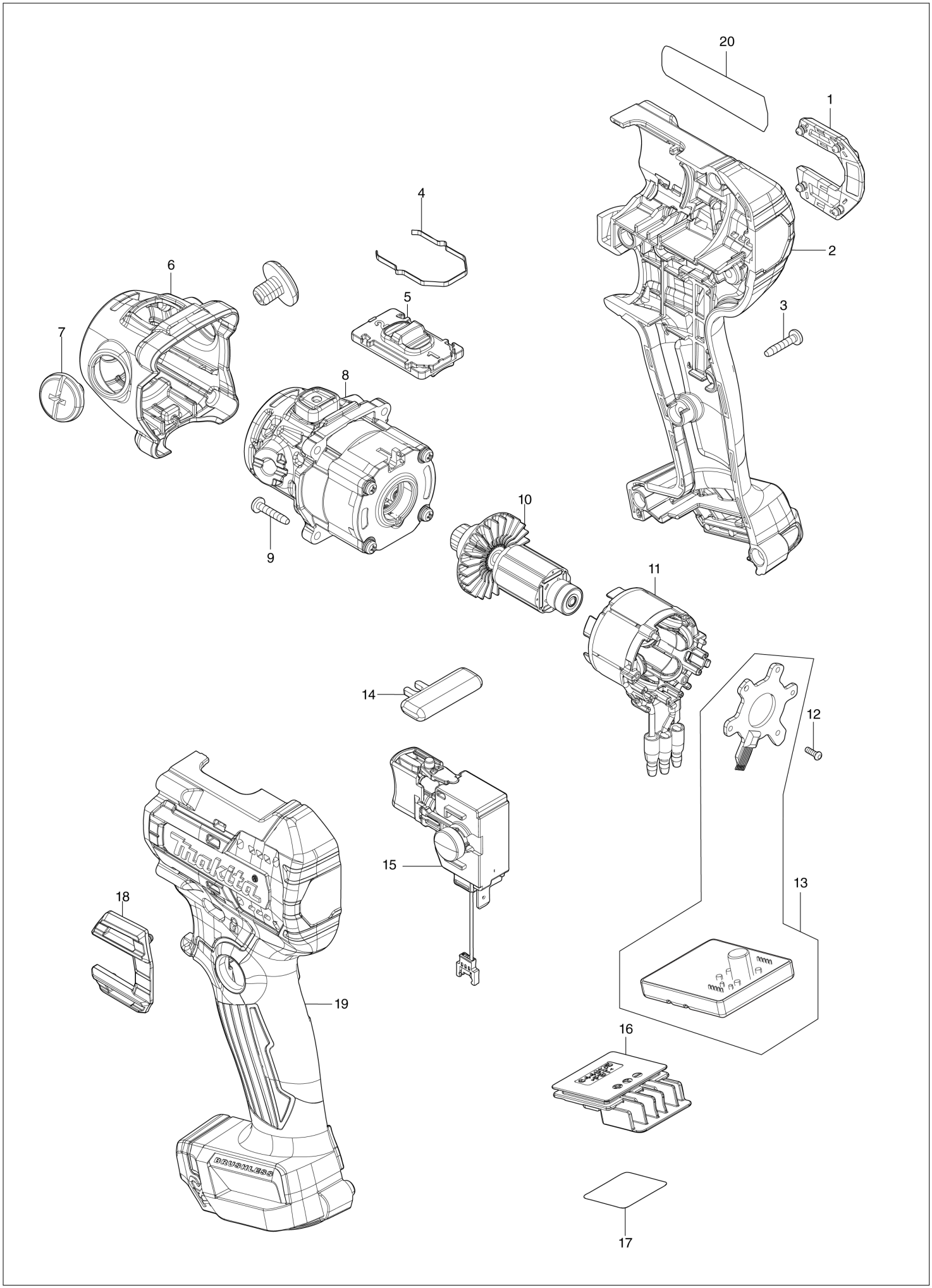

PV301D / 75MM CORDLESS SANDER POLISHER

Item	Sub	Parts No.	Parts Description	Qty	I/C	E/C No.	Close No.	Remark
001		422613-1	DUST COVER	1				
002		191P13-9	HOUSING SET	1				
	C10	8028C3-7	INDICATION LABEL	1				
	C20	263002-9	RUBBER PIN 4	2				
	D10		INC. 19					
003		266130-9	TAPPING SCREW BIND PT 3X16	7				
004		232659-7	LEAF SPRING	1				
005		127720-2	SPEED CHANGE LEVER ASSEMBLY	1				
	C10	232636-9	COMPRESSION SPRING 3	2				
006		413228-5	HEAD COVER	1				
007		413229-3	+ROUND HEAD SCREW M8X10	2				
008		127721-0	GEAR ASSEMBLY	1				
009		266130-9	TAPPING SCREW BIND PT 3X16	4				
010		619663-7	ROTOR	1				
011		629A37-0	STATOR	1				
012		266490-9	TAPPING SCREW PT 2X6	3				
013		620D23-2	CONTROLLER	1				
014		412697-7	LOCK OFF BUTTON	1				
015		651489-1	SWITCH C3JW-4B-L6	1				
016		644813-5	TERMINAL	1				
017		858C13-1	PV301D SERIAL NO. LABEL	1				
018		422613-1	DUST COVER	1				
019		191P13-9	HOUSING SET	1				
	C10	8028C3-7	INDICATION LABEL	1				
	C20	263002-9	RUBBER PIN 4	2				
	D10		INC. 2					
020		858C06-8	PV301D NAME PLATE	1				
A01		140X75-2	GRIP 30 COMPLETE	1				
A02		191N90-9	SPONGE PAD 80 SET	1				
A03		191N91-7	SPONGE PAD 80 SET	1				
A04		191N92-5	WOOL PAD 80 SET	1				
A05		743124-6	PAD 50	1				
A06		743125-4	PAD 75	1				
A07		743126-2	ADAPTER	1				

Interchange
O : Yes
X : No
< : the new part can be substituted for the current.
> : the current part can be substituted for the new.
S : Interchangeable as a set.